NOTES:
1. CLEAN MATING SURFACE WITH DENATURED/ISOPROPYL ALCOHOL PRIOR TO ADHERING DECAL OR LOGO
2. TENSION BELT TO 116Hz
3. TORQUE TO 135Nm - 155Nm BEFORE INSTALLING SPLIT PIN
4. TORQUE TO 175 Nm
5. TORQUE M12 TO 100 Nm
6. TORQUE M10 TO 60 Nm
7. TORQUE M8 TO 31 Nm
8. TORQUE M6 TO 12 Nm
9. APPLY LOCTITE 242 TO THREADS

REVISION HISTORY

REV	DATE	DESCRIPTION	ECO	BY
A	7/27/2016	PRODUCTION RELEASE	15456	BB

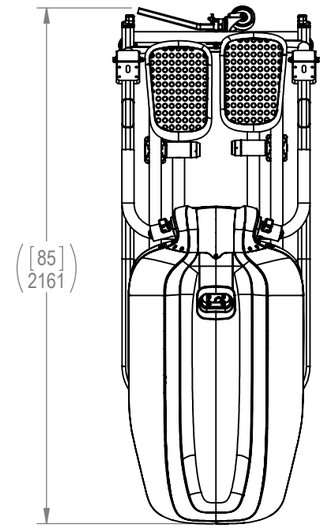

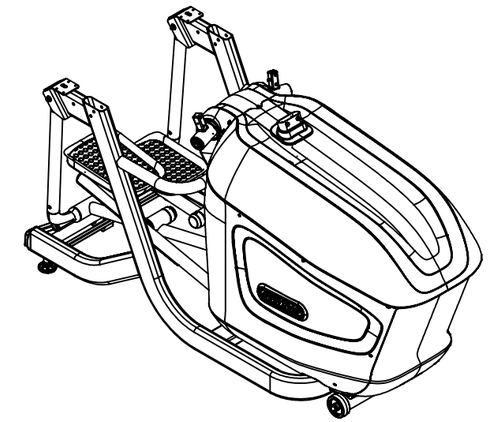

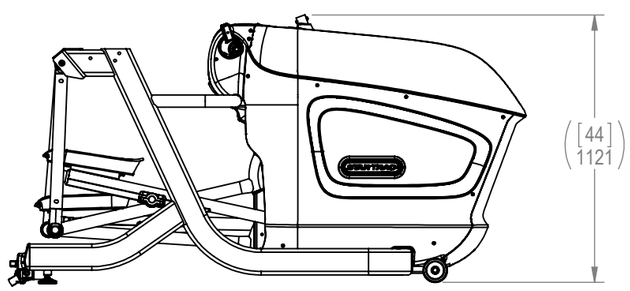

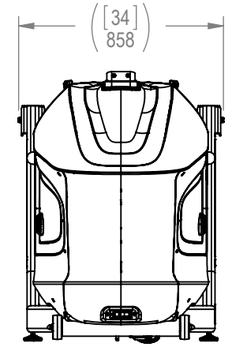

DOCUMENT STATUS:

NOTICE OF PROPRIETARY INFORMATION

THIS DOCUMENT SHALL NOT BE REPRODUCED NOR SHALL THE INFORMATION CONTAINED HEREIN BE USED BY OR DISCLOSED TO OTHER EXCEPT AS EXPRESSLY AUTHORIZED BY CORE HEALTH & FITNESS, LLC.

UNLESS OTHERWISE SPECIFIED DIMS ARE IN mm. TOLERANCES FOR MEASURE OF LENGTH ARE: ANGLES = ±2°

CLASS OF WORK		0.5 to 3	> 3 to 6	> 6 to 30	> 30 to 120	> 120 to 400	> 400 to 1000	> 1000 to 2000	> 2000
FINE		±0.05	±0.05	±0.1	±0.15	±0.2	±0.3	±0.5	-----
MEDIUM	X	±0.1	±0.1	±0.2	±0.3	±0.5	±0.8	±1.2	±2
COARSE		±0.2	±0.3	±0.5	±0.8	±1.2	±2	±3	±4
VERY COARSE		-----	±0.5	±1	±1.5	±2.5	±4	±6	±8

MATERIAL
SEE BOM

FINISH
N/A

VENDOR: N/A P/N: N/A

THIRD ANGLE PROJECTION

	INITIAL	DATE
DRAWN	BB	6/17/16
CHECKED		
APPROVED		
	U.O.M.	MM

CORE HEALTH & FITNESS, LLC
4400 NE 77th Ave., Suite 300
Vancouver, WA 98662

CORE PART NO: 721-1269-XX
REV: A

TITLE: VERSASTRIDER

SCALE: 1:25 | SHEET 1 OF 9 | SHEET SIZE: B

ITEM NO.	PART NUMBER	DESCRIPTION	QTY.
1	020-7599-XX	SHROUD, CENTER, REAR	1
2	020-7600-XX	SHROUD, UPPER REAR, RIGHT	1
3	020-7601-XX	SHROUD, REAR, LEFT, MCT	1
4	020-7626-XX	SHROUD, LOWER, CENTER, LEFT	1
5	020-7627-XX	SHROUD, LOWER, CENTER, RIGHT	1
6	020-7628-XX	ENDCAP, REAR, STEP, LEFT, MCT	1
7	020-7629-XX	ENDCAP, REAR, STEP, RIGHT, MCT	1
8	020-7631	CAP, KNUCKLE, LEG	4
9	020-7640-XX	SHROUD, TOP REAR	1
10	020-7747	GROMMET, NECK, VERSASTRIDER	1
11	020-7647-XX	SHROUD, BOTTOM SUPPORT, RIGHT, VS	1
12	020-7648-XX	SHROUD, BOTTOM CONNECTOR, LEFT, VS	1
13	020-7715	PLATE, RETAINING, CAP	4
14	020-7727-XX	ASSY, SHROUD, FRONT, VERSA	1
15	020-7743-XX	ASSY, SHROUD, SIDE, LEFT, VERSA	1
16	020-7744-XX	ASSY, SHROUD, SIDE, RIGHT, VERSA	1
17	110-3026	SCREW, #10-24, 1/2", PHTC, PH, CS, ZP	3
18	110-3280	Screw, M4x0.7, 10mm, BHC, HK, SS	10
19	110-3524	NUT, ACORN, 1/2"-13	2
20	110-3671	Nut, "U", Barrel, Tappered, M5x0.8mm	16
21	110-3672	NUT, M8 X 1.25, CS, NYLOC, BLK E-COAT, GR-10	10
22	110-3676	SCREW, M8x1.25, 20mm, SHC, HK, AS, GR 12.9, BLK E-COAT	4
23	110-3678	SCREW, M5x0.8, 12mm, BHC, HK, CS, GR 8.8, BLK E-COAT	1
24	110-3694	NUT, CASTLE, M20X1.5, BEC, Cl 10	4
25	110-3695	SCREW, SHOULDER D:12mm, M10 X 1.5 X 100mm, SHS, HK, AS, BEC, Cl. 12.9	4
26	110-3714	WASHER, M5, 10 X 5.3 X 1.1mm, NP	4
27	110-3725	SCREW, M10 X 1.5 X 45, HHM, HE, AS, BEC, Cl. 10.9	2
28	110-3757	PIN, SPLIT, 3.2MM X 32	4
29	110-3762	SCREW, M10 X 1.5 X 25 HHM, BEC, AS, ZP, Cl. 10.9	2
30	110-3766	SCREW, M5X0.8, 50mm, SHC, HK, AS, BEC, Gr 10.9	4
31	110-3767	SCREW, M5X0.8, 40mm, SHC, HK, AS, BEC, Gr 10.9	4
32	110-3768	SCREW, M5X0.8, 25mm, SHC, HK, AS, BEC, Gr 10.9	8
33	110-3769	SCREW, M5 X 0.8, 16mm,SHC, HK,AS, BEC, Cl 10.9	8
34	110-3770	SCREW, M5X0.8, 12mm, SHC, HK, AS, BEC, Gr 10.9	10
35	110-3771	SCREW, SHOULDER D:12mm, M10 X 1.5 X 80, SHS, HK, AS, BEC, Cl. 12.9	2
36	110-3965	SCREW, M5X0.8, 20mm, FHM, PH, AS, BEC, Grd-8.8	2

ITEM NO.	PART NUMBER	DESCRIPTION	QTY.
37	120-3385	WASHER, M8, 8.5x19x1.2, BLK E-COAT	10
38	120-3393	WASHER, M20, BLACK E-COAT	4
39	130-1694	WHEEL, 4.0" OD X 0.5" BORE	2
40	130-1868	BELT, POLY-V 610J, MCT	1
41	140-3485	W/ 1/2-13 STUD, FOOT, PIVOT, 15°, 77mm OD	2
42	140-3517	CLIP, HARNESS, WIRE, EXWHC2-500	16
43	140-3605	WIRE,SPRING CLIP	2
44	140-3627	CLAMP, SCREW MOUNT, MAX CABLE ID: 4.8mm	8
45	240-6846	CONNECTOR, 8 PIN, INLINE	1
46	260-0939	W/ PULLEY, GEN/BRAKE, HYBRID, 6200	1
47	721-1203-XX	FRAME, MAIN, VERSA	1
48	721-1205	ASSEMBLY, FRAME,PLASTIC,VERSA	1
49	721-1235	WASHER, ADJUSTABLE LINK	8
50	721-1236	LINKAGE, DEPENDENCY, VERSA	4
51	721-1253	ASSY, LCB, MCT	1
52	721-1256	WASHER, OD: 32mm, ID: 11mm, T: 6mm	2
53	721-1258	ASSY, SENSOR, STRIDE LENGTH	1
54	721-1271	CABLE,AMPLITUDE SENSOR	1
55	721-1273	CABLE, HEART RATE TO CONSOLE	1
56	721-1277-XX	ASSY, SHROUD, TOP	1
57	721-1283	ASSY,WIRE,CSAFE,MCT	1
58	721-1285	ASSY,WIRE,POWER,MCT	1
59	721-1287	VIDEO COAX	1
60	721-1289	ASSY,COMM,MCT	1
61	721-1293	SPACER, SENSOR MAGNET	2
62	721-1359	ASSY, CRANK, VERSA	2
63	721-1385	CABLE, RESISTANCE CONTROL, FRAME TO DISPLAY	1
64	721-1390	FOOT PEDAL ASSY, VERSASTRIDER, RIGHT	1
65	721-1391	FOOT PEDAL ASSY, VERSSTRIDER, LEFT	1
66	721-1395	CABLE, DISPLAY GROUND, VS	1
67	721-1405	ASSY,SWING LEG,VERSA	2
68	721-1411	ASSY,ARM,FRAME-LEG,VERSA,LEFT	1
69	721-1412	ASSY,ARM,FRAME-LEG,VERSA,RIGHT	1
70	721-1414	ASSY, LEG, FOOTPEDAL, LEFT, VERSA	1
71	721-1415	ASSY,LEG BEAM,VERSA,RIGHT	1
72	721-1418	ASSY,VARIABLE CAM,VERSA	2

ITEM NO.	PART NUMBER	DESCRIPTION	QTY.
73	721-1422	ASSY, DEPENDENCY LINK, VS	1
74	721-1423	ASSY,PIVOT,HANDLES,LEFT	1
75	721-1424	ASSY,PIVOT,HANDLES,RIGHT	1
76	721-1427	ASSY, WHEEL, CASTER, VERSA	1
77	731-0357	WASHER,PLAIN,M12	12
78	731-0360	WASHER,PLAIN,M8,LARGE,GRADE A	8
79	731-0363	NUT,M10X1.5,NYLOC	18
80	731-0364	SCREW,M8 X 1.25,45MM,BHC,HK	4
81	731-0367	WASHER,PLAIN,M10	8
82	731-0373	WASHER,PLAIN,M6	8
83	731-0562	NUT,M8 X 1.25,NYLOC	4
84	731-1045	SCREW, M10X1.5, 80MM, SHC, HK, ZP	4
85	731-1363	NUT, M6X1.0, NYLOC	4
86	731-1476	Screw, M10x1.5, 45mm, HHM, HE, CS, NKL, Gr-10.9	3
87	731-1755	Nut, Jam, Thin, M10x1.5, CS, ECB	3
88	731-5725	RIVET NUT, HEX HEAD,M8	4
89	740-4069	Nut, Serrated-Flange, M14x1.5, CS, ECB	2
90	740-4552	PILLOW BLOCK, 25mm ID	2
91	740-4588	Screw, M8x1.25, 16mm, BHC, HK, SS	4
92	740-4593	Screw, Set, M8x1.25, 40MM, CPS, HK, AS, ECB	1
93	740-7723	ASSY, FLYWHEEL, E-CT	1
94	740-7825	Washer, M8, Ø8.4xØ16x1.6mm, SS	8
95	740-7896	Screw, M4.2, 12mm, PHT, PH, SS	2
96	740-7898	Screw, M6x1.0, 20mm, SHC, HK, CS, ECB, Cl. 10.9	4
97	740-8606	ASSY, TENSIONER, E-CT	1
98	740-8933	ASSY, MAGNET, SENSOR, ECH 2	1

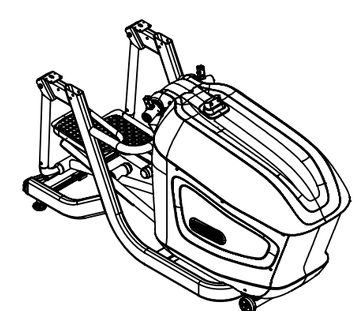

CORE HEALTH & FITNESS, LLC
4400 NE 77th Ave., Suite 300
Vancouver, WA 98662

CORE PART NO **721-1269-XX** | REV **A**

TITLE VERSASTRIDER

SCALE: 1:35 | SHEET 2 OF 9 | SHEET SIZE: B

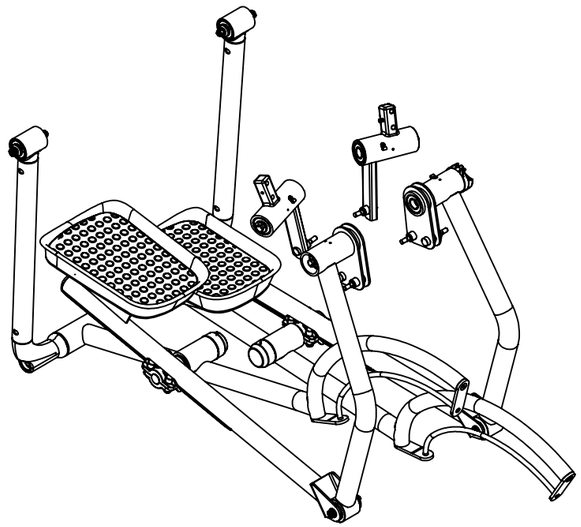

ARM AND LEG SUPPORTS
SEE SHEET 4

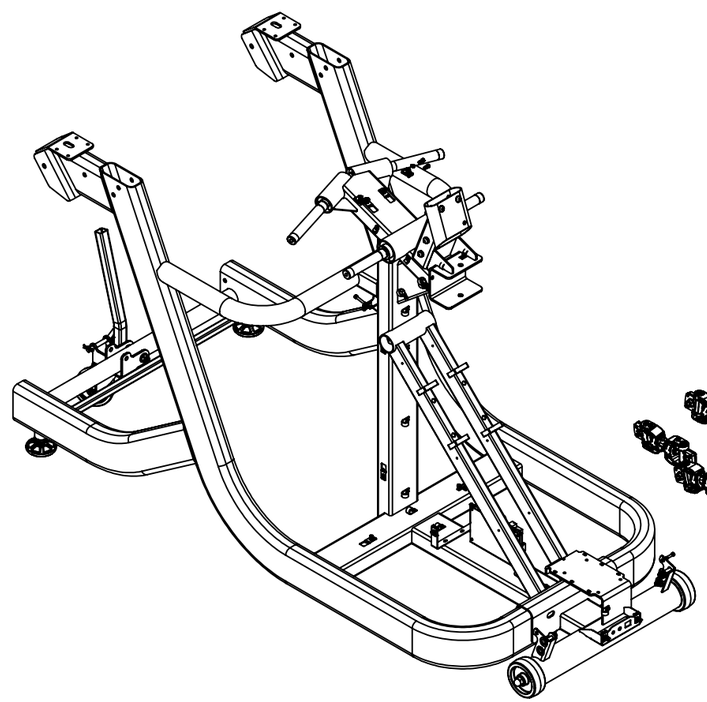

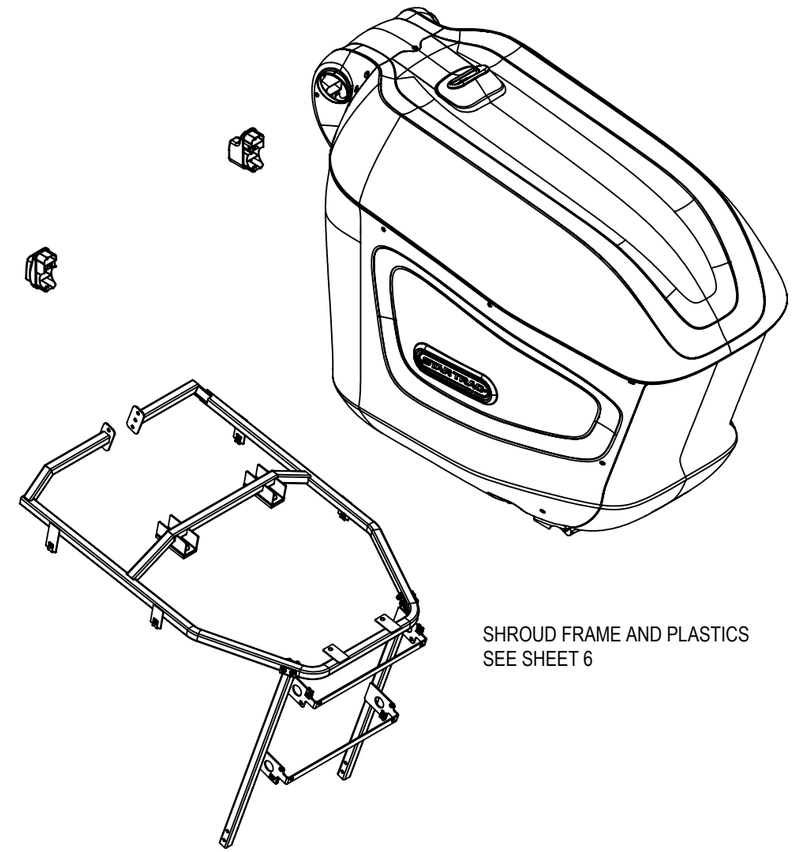

SHROUD FRAME AND PLASTICS
SEE SHEET 6

DEPENDENCY LINKAGE
SEE SHEET 5

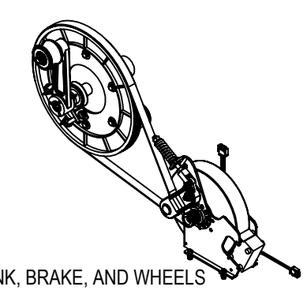

CRANK, BRAKE, AND WHEELS
SEE SHEET 3

CORE HEALTH & FITNESS, LLC
4400 NE 77th Ave., Suite 300
Vancouver, WA 98662

CORE PART NO	REV
721-1269-XX	**A**

TITLE
VERSASTRIDER

SCALE: 1:15	SHEET 3 OF 9	SHEET SIZE: B

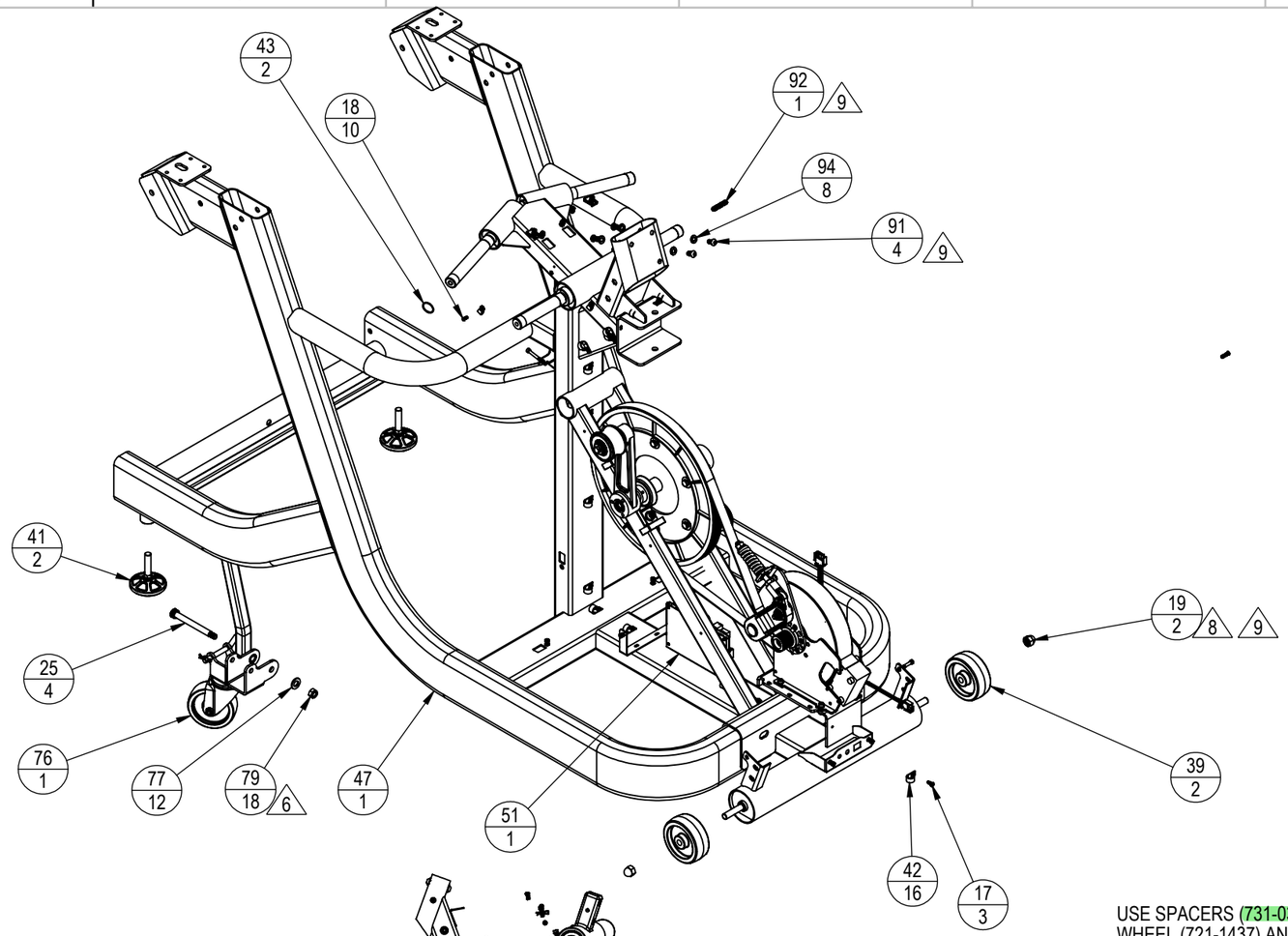

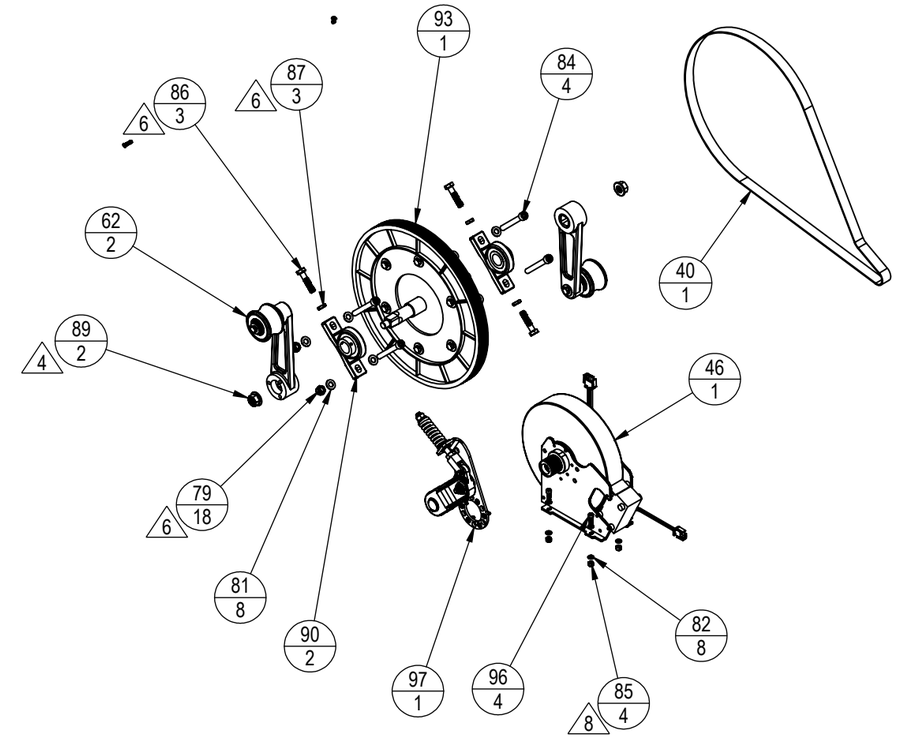

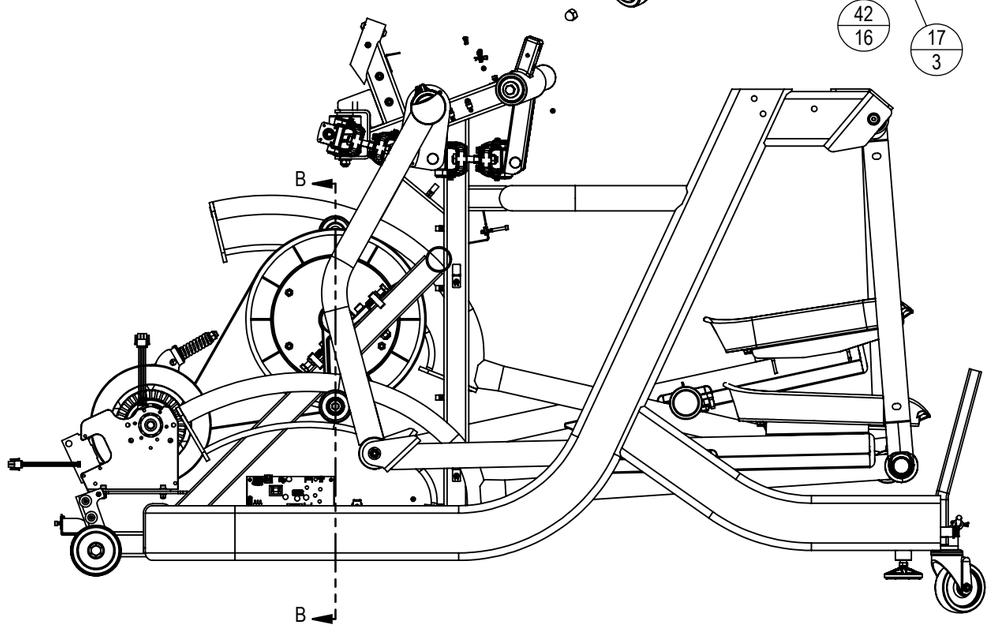

USE SPACERS (731-0360) TO ALIGN CRANK WHEEL (721-1437) AND CURVED ARM (721-1208) SUCH THAT THROUGHOUT THE RANGE OF A FULL STRIDE, THE CURVED ARM IS CENTERED ON THE CRANK WHEEL WITHIN +/- 6mm

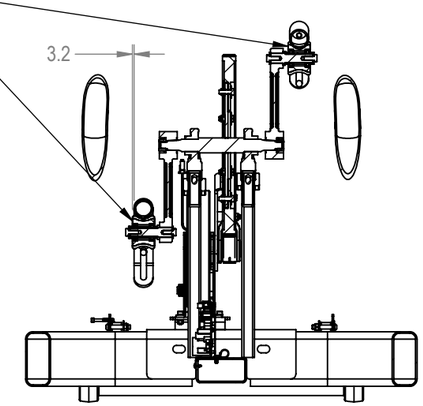

SECTION B-B

CORE HEALTH & FITNESS, LLC
4400 NE 77th Ave., Suite 300
Vancouver, WA 98662

CORE PART NO	REV
721-1269-XX	**A**

TITLE
VERSASTRIDER

SCALE: 1:12 | SHEET 4 OF 9 | SHEET SIZE: B

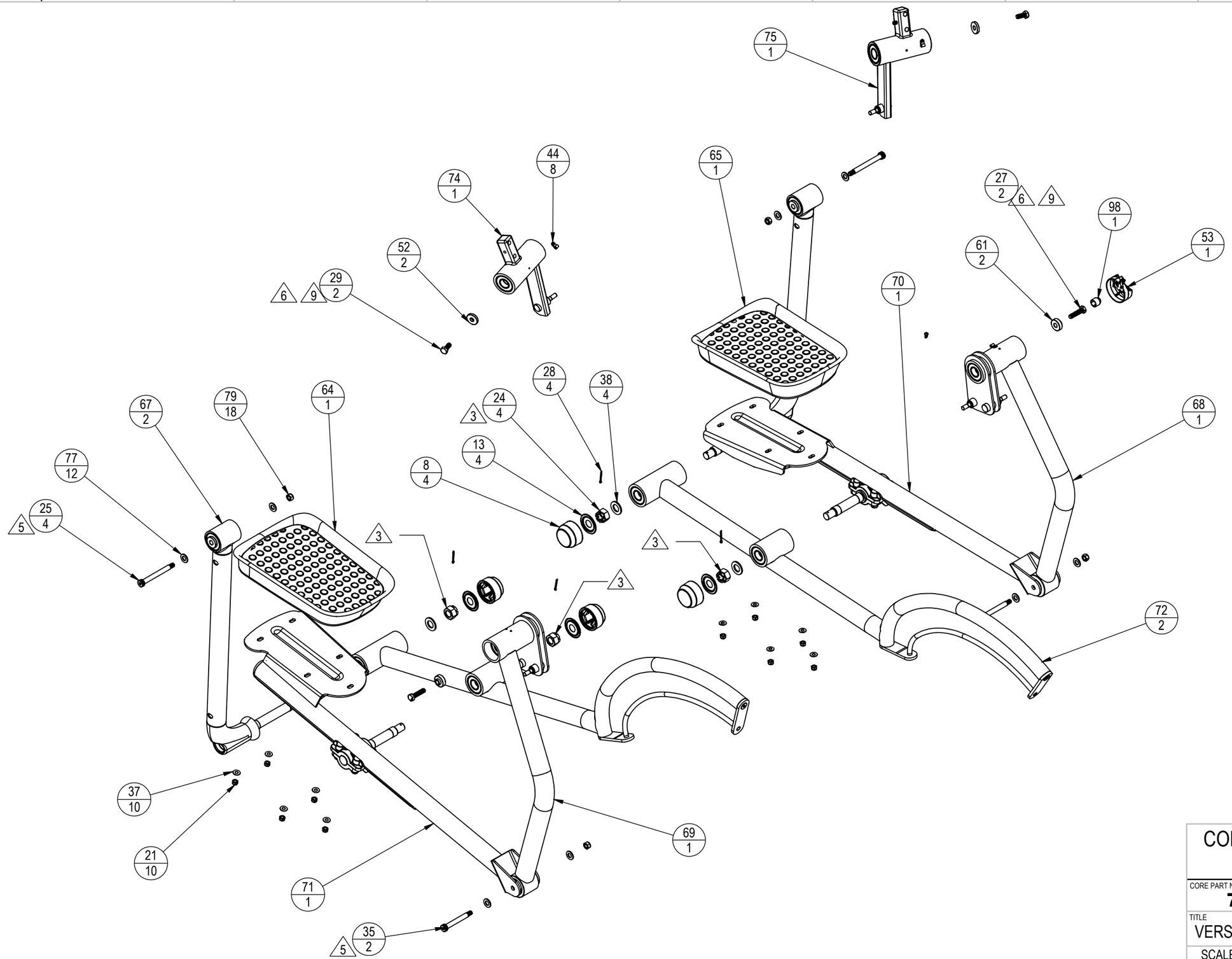

CORE HEALTH & FITNESS, LLC
4400 NE 77th Ave., Suite 300
Vancouver, WA 98662

CORE PART NO	REV
721-1269-XX	**A**

TITLE
VERSASTRIDER

SCALE: 1:10	SHEET 5 OF 9	SHEET SIZE: B

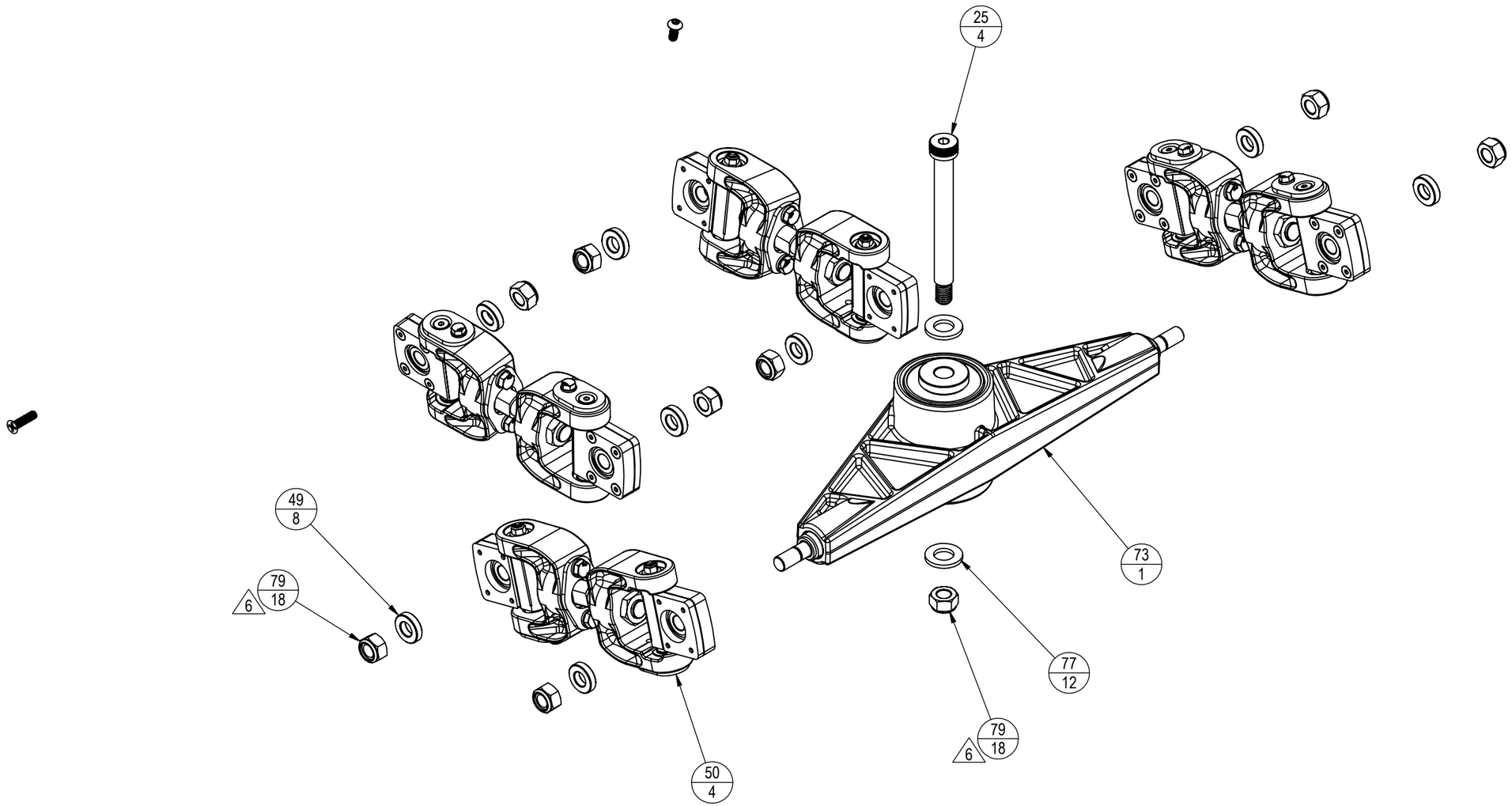

CORE HEALTH & FITNESS, LLC
4400 NE 77th Ave., Suite 300
Vancouver, WA 98662

CORE PART NO	REV
721-1269-XX	**A**

TITLE
VERSASTRIDER

SCALE: 1:3	SHEET 6 OF 9	SHEET SIZE: B

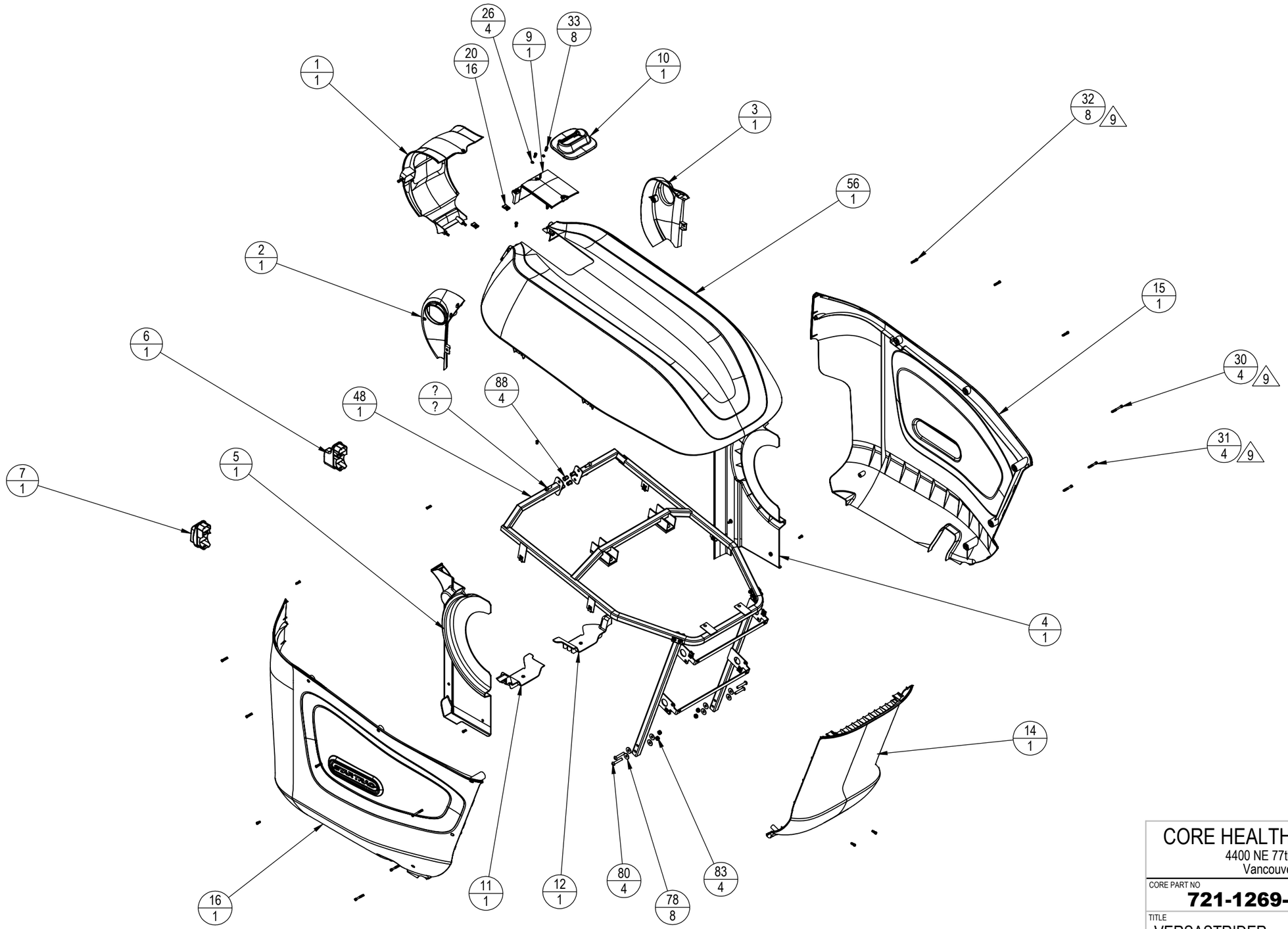

CORE HEALTH & FITNESS, LLC
4400 NE 77th Ave., Suite 300
Vancouver, WA 98662

CORE PART NO	REV
721-1269-XX	**A**

TITLE
VERSASTRIDER

SCALE: 1:15	SHEET 7 OF 9	SHEET SIZE: B

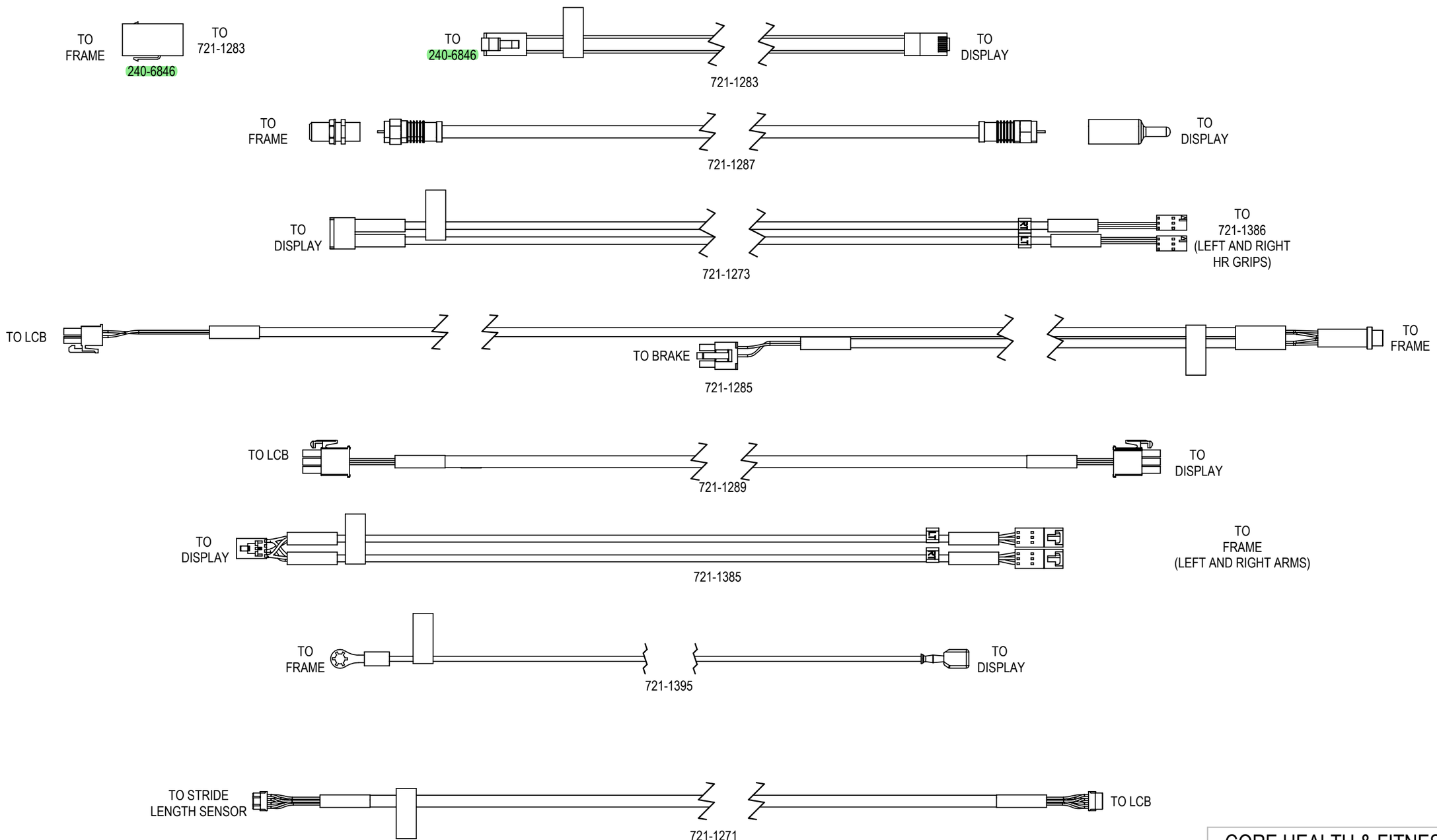

CORE HEALTH & FITNESS, LLC
4400 NE 77th Ave., Suite 300
Vancouver, WA 98662

CORE PART NO	REV
721-1269-XX	**A**

TITLE

SCALE: 1:2 | SHEET 8 OF 9 | SHEET SIZE: B

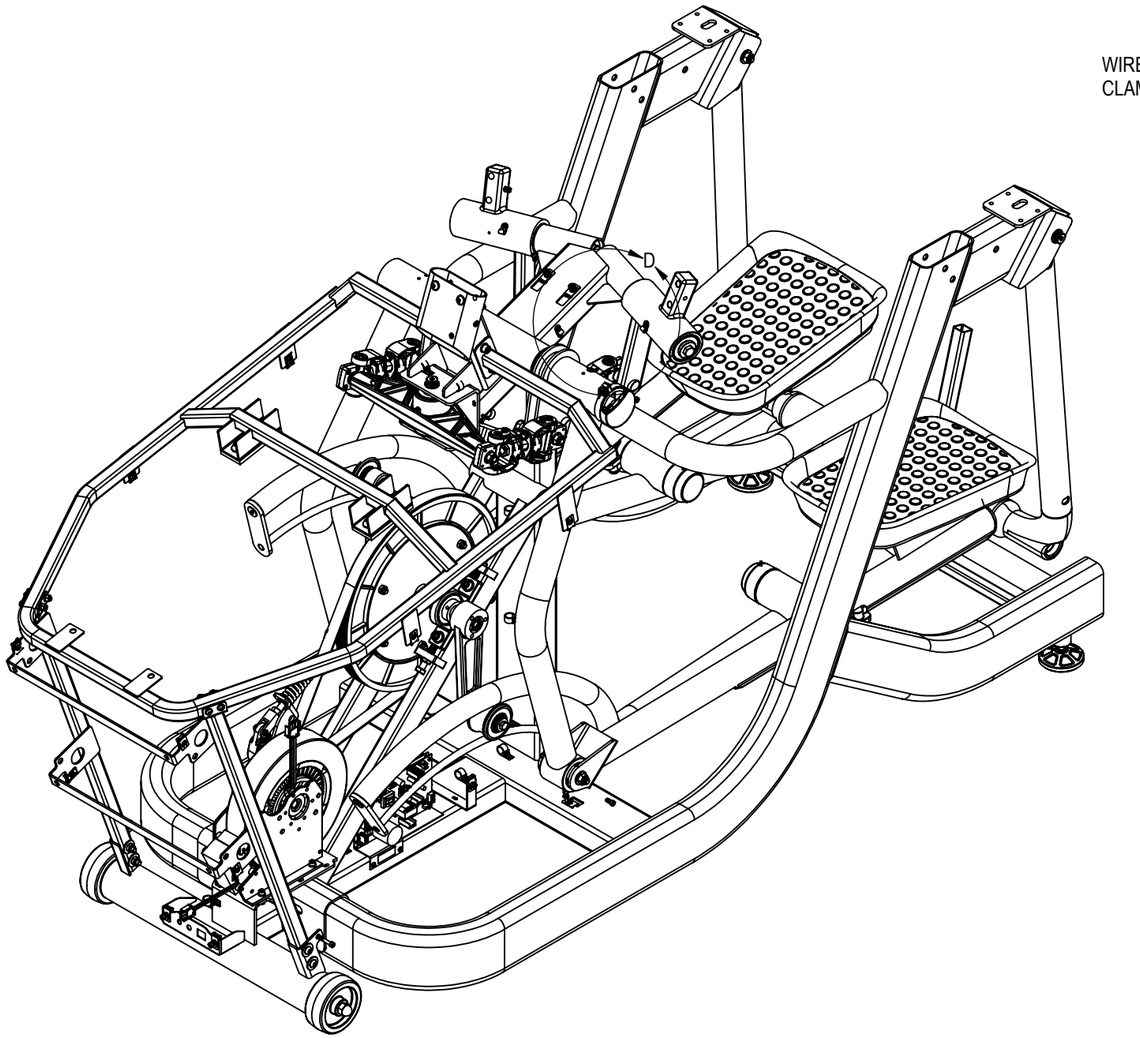

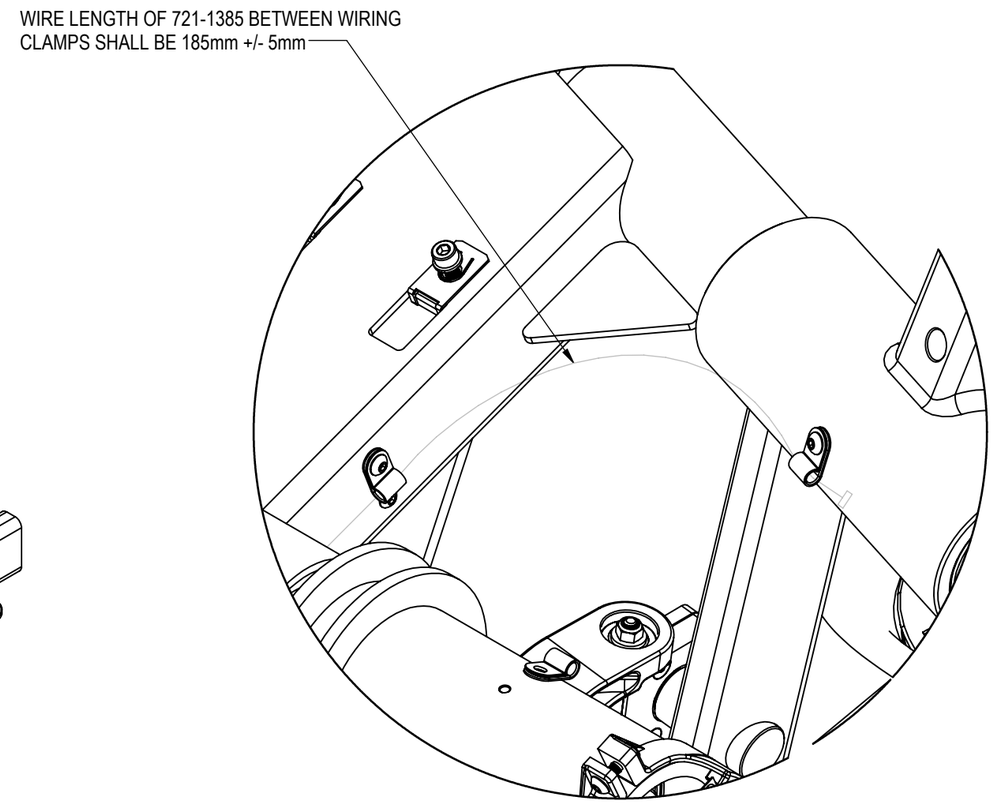

DETAIL D
SCALE 1 : 2

CORE HEALTH & FITNESS, LLC
4400 NE 77th Ave., Suite 300
Vancouver, WA 98662

CORE PART NO	REV
721-1269-XX	**A**

TITLE
VERSASTRIDER

SCALE: 1:10	SHEET 9 OF 9	SHEET SIZE: B